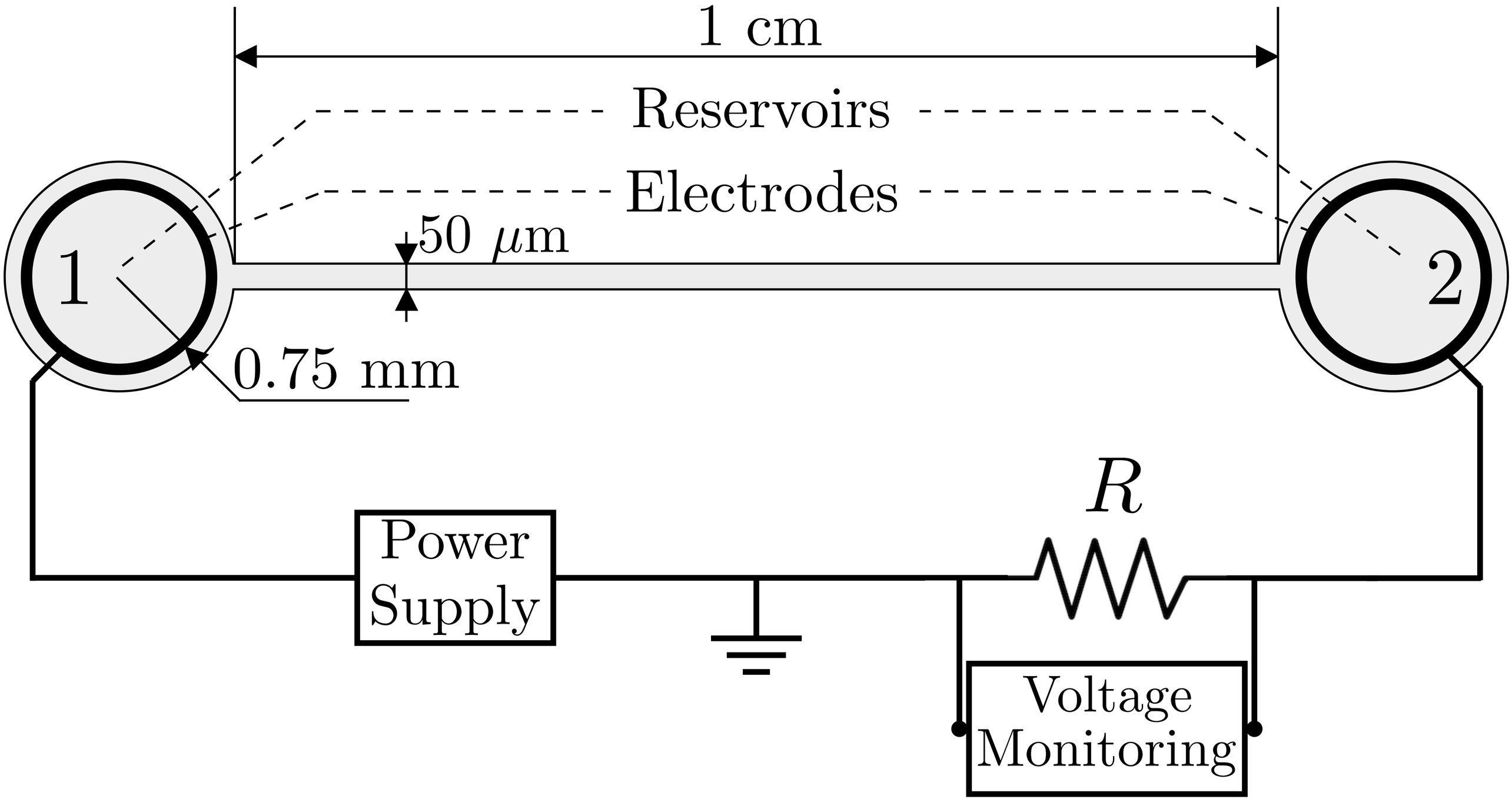
1 cm
Reservoirs
Electrodes
50 μm
1
2
0.75 mm
R
Power Supply
Voltage Monitoring