A

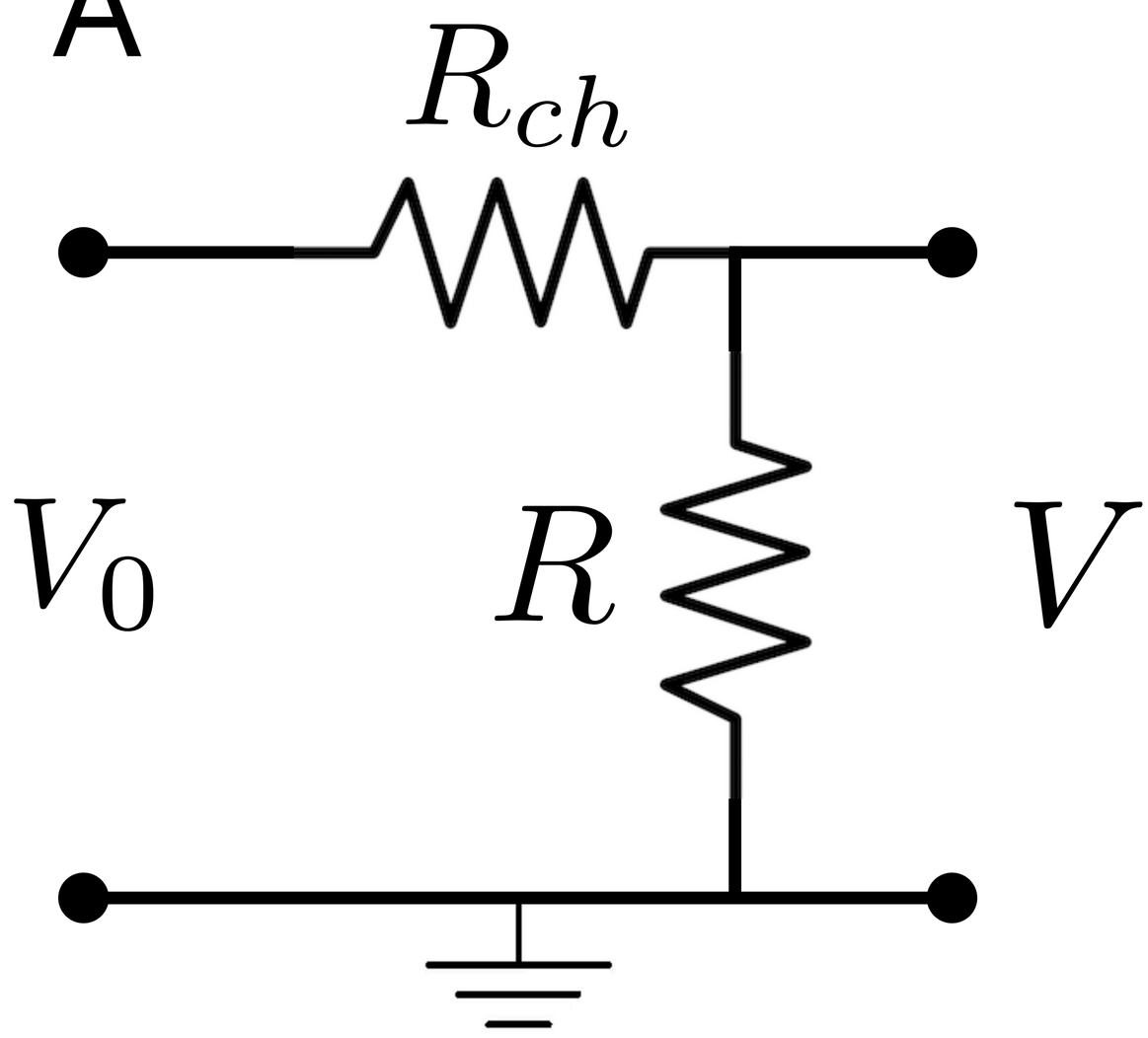
$R_{ch}$
$V_0$
$R$
$V$

C

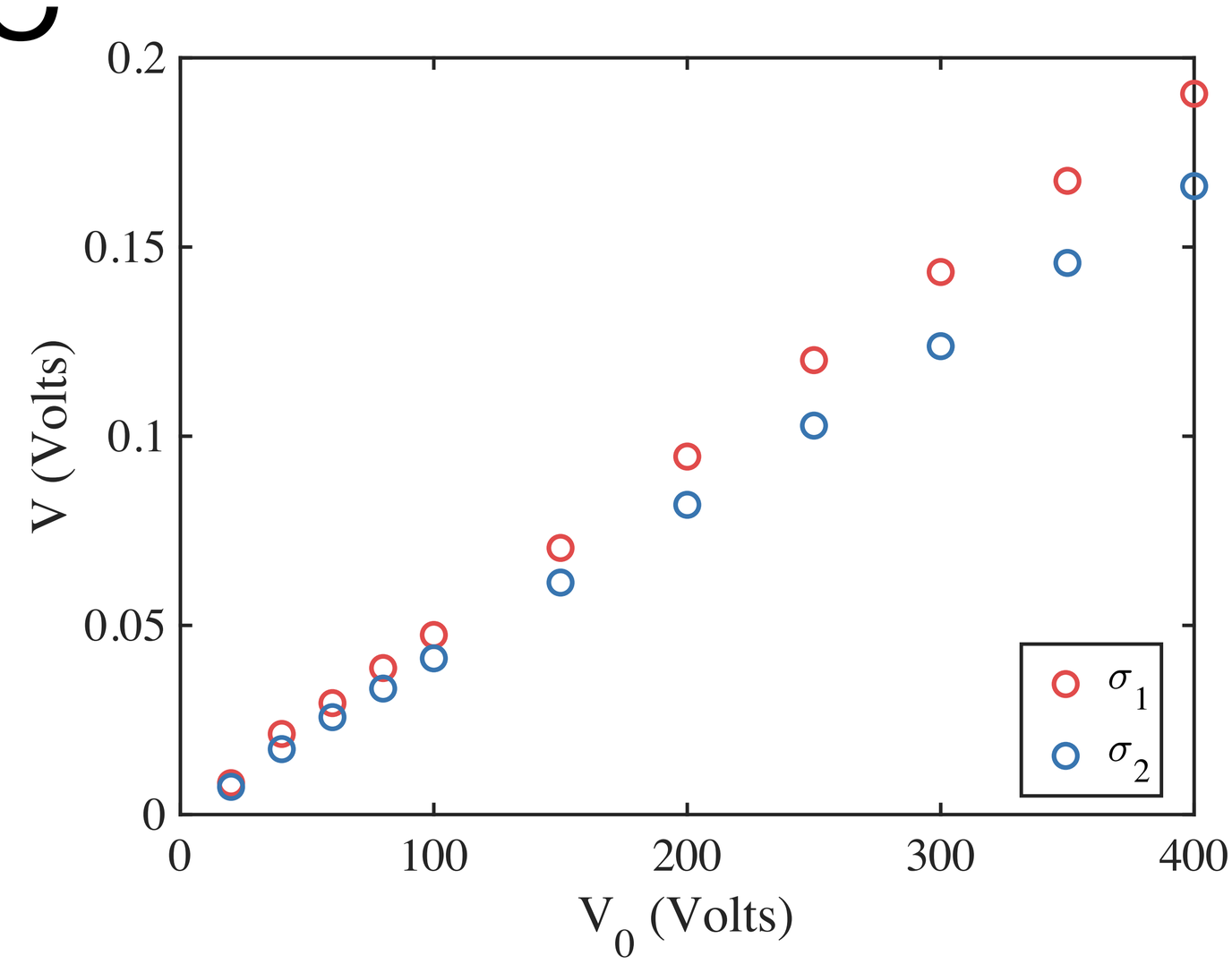
0.2
0.15
0.1
0.05
0
V (Volts)
0
100
200
300
400
$V_0$ (Volts)
$\sigma_1$
$\sigma_2$

B

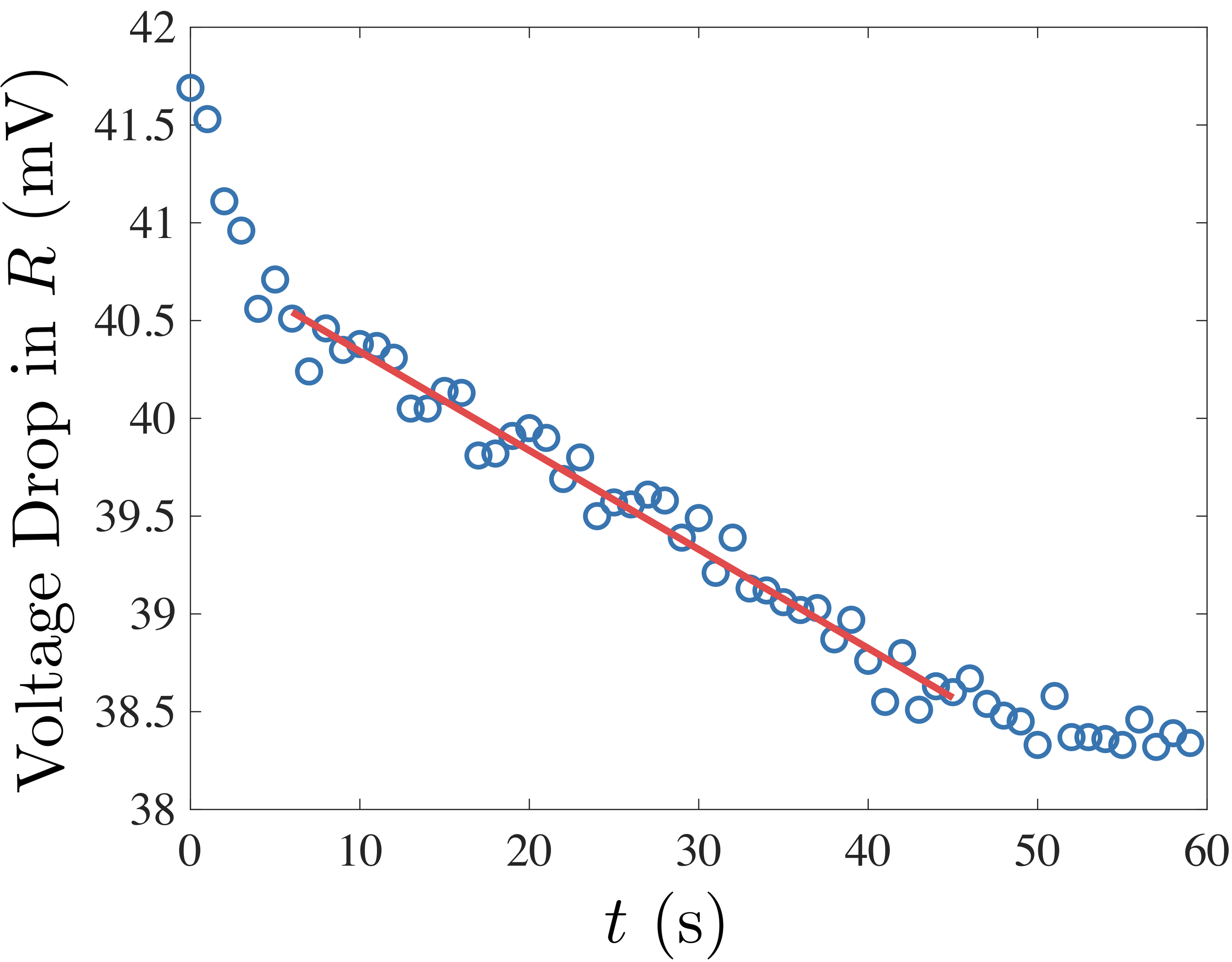
42
41.5
41
40.5
40
39.5
39
38.5
38
Voltage Drop in $R$ (mV)
0
10
20
30
40
50
60
$t$ (s)